Spiral Systems Incorporated

SINGLE WALL ROUND

Straight and Conical Taps

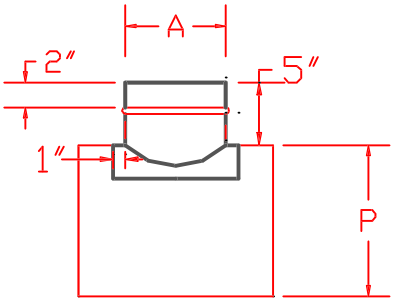

SST90
STRAIGHT SADDLE TAP 90°
TO ORDER LIST A
and P (Pipe Size)
Field Installed

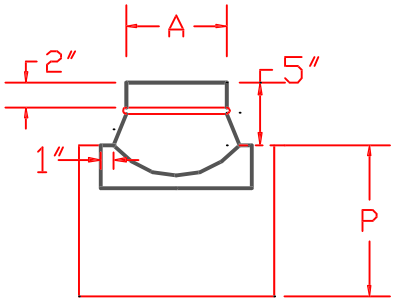

CT90
SADDLE TAP 90°
TO ORDER LIST A
and P (Pipe Size)
Field Installed

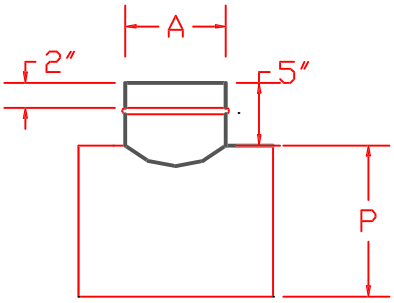

ST90
TAP 90°
TO ORDER LIST B
AND P (Pipe Size)
(SADDLE NOT INCLUDED)
Factory or Field Installed

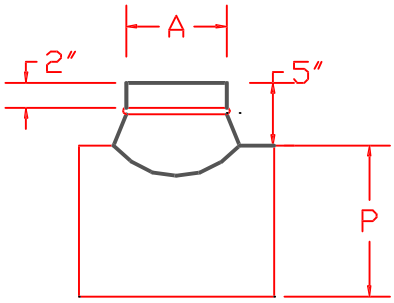

CT90
TAP 90°
TO ORDER LIST A
AND P (Pipe Size)
(SADDLE NOT INCLUDED)
Factory or Field Installed